Age Range: 3 and up
Weight Limit: 130 lbs.
Surfaces: Grass/Asphalt/Hard Surfaces
Speed: 2.5 For/Rev
5.0 For
Colors: Purple Body/Pink Seat/ Black Wheels
Intro: 2005
Suggested Retail: 219.99
Box Dimensions:
18.375 x 33.375 x 44.750
67 lbs.
Warranty
One Year Vehicle
6 Months Battery

H3427
Barbie Jammin' Jeep

12V

Advanced Series

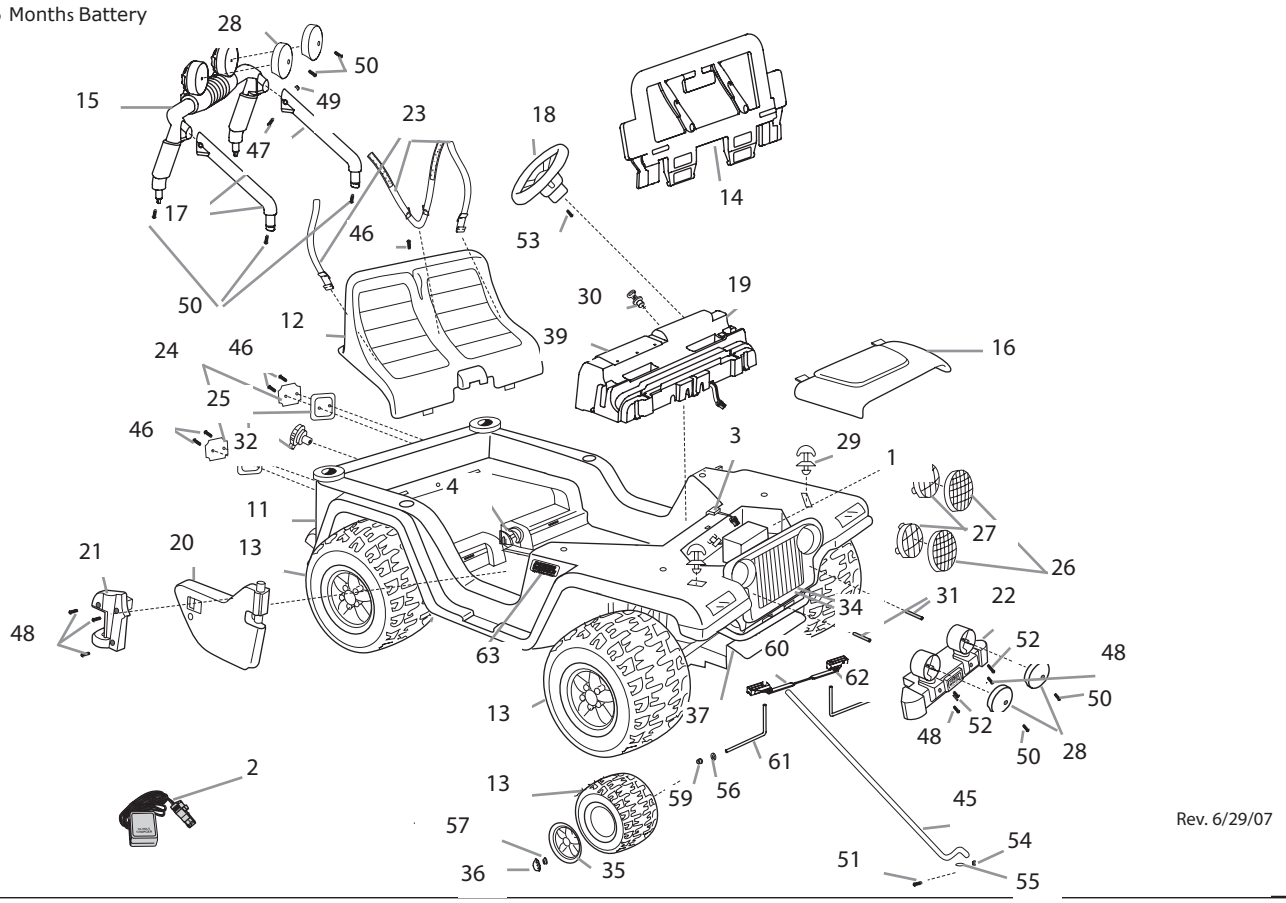

Rev. 6/29/07

Item No.	Description	Part No.	Qty.
	Working / Electrical Parts		
1.	12V Single Battery	00801-0638	1
2.	12V Single Charger	00801-0972	1
3.	**Main Harness Assembly**	**C2390-9799D1**	
4.	Shifter Assembly	74310-9239	1
	Plastic/Other Parts		
11.	Body	N/A	1
12.	Seat	H3427-2519	1
13.	Wheel	B7659-2459	4
14.	Windshield	B0155-2619	1
15.	Sport Bar	B0155-2219	1
16.	Hood w/Bag	H3427-2859	1
17.	Sport Bar Support	B0155-2769	2
18.	Steering Wheel	H3427-7645	1
19.	Dash w/ Radio	H3427-9259D	1
20.	Door (Right)	H3427-9229	1
21.	Door Hinge (Right)	H3427-2249	1
22.	Brushguard/Bumper	H3427-2189	1
23.	Seatbelt Set	H3427-5339	1
24.	Taillight Lens Set	73233-2279	1
25.	Taillight Housing Set	H3427-2749	1
26.	Lens Guard	H3427-2839	2
27.	Headlight Lens	74450-2279	2
28.	Light Cover	H3427-2169	4
29.	Hood Latch	H3427-9559	2
30.	Key Assembly	75840-9409	1
31.	Spacer	H3427-2529	2
32.	Gas Cap	H3427-2539	1
34.	Grill	78478-2849	1
35.	Hubcap	B7659-2469	4
36.	Hubcap Cover	B7659-2679	4
37.	Front Module	H3427-2119	1
39.	****Radio**	**H3427-9309**	**1**
	(Consumer Replaceable By Ordering Part 19 (Dash w/Radio Assy.)		
	Hardware / Metal Parts		
45.	Steering Column*	H3427-4239	1
46.	8 x 1 Screw N/A	00912-8003	5
47.	8-32 x 1.625" Screw	00801-1276	2
48.	10 x 1 Screw N/A	00801-1256	11
49.	8 Acorn Lock Nut N/A	00801-1277	2
50.	10 x 1/2 Screw N/A	00801-0255	10
51.	8 x 5/8 Screw	N/A	1
52.	8 x 3 Screw N/A (Order Hardware Bag)	00914-0040	2
53.	6 x 1 1/2 Screw N/A (Order Hardware Bag)		1
54.	8 Lock Nut N/A	00905-0117	1
55.	3/8 Washer N/A (Order Hardware Bag)		1
56.	7/16 Washer	0801-0196	4
57.	.437 Cap Nut	0801-0227	6
59.	7/16 Round/Axle Bushing	74550-2689	2
60.	Cross Bar	75840-4409	1
61.	Front Axle	B7659-4519	2
62.	Steering Linkage	B7659-9419D	1
63.	Power Wheels Emblem	74460-9069	2
	Parts Not Shown		
	Parts Bag	H3427-9269	1
	Hardware Bag	H3427-9299	1
	Owners Manual	H3427-0920	1
	Decal Sheet	H3427-0310A	1
	Switch Control (Shifter Rocker)	**00801-0923**	
	Door Hinge (Left)	H3427-2279	1
	Door (Left)	H3427-9209	1
	Motor Gearbox Assembly	**00968-2912**	**2**
	Gearbox W/out Motor	**00968-2802**	**2**
	Motor Pinion Assembly	**00968-2702**	**2**
	Rear Axle	B7659-4529	1
	Footboard Assembly	74020-9839D	1
	Battery Retainer	H3427-7809	1
	1/4 x 1 1/2 Screw	0801-0578	2
	Wheel Driver	74460-2249	2
	Channel Cover	H3427-2489	1
	Radio Battery Cover w/screws and washers	H3427-2459	1

Bold and Underlined parts are to be purchased and installed by Service Centers only. These items may not be sold directly to consumers by Service Centers or Fisher-Price.

**Service Centers: Please see Service Bulletin #176 for replacement of Radio/CD Combo.

N/A = Not Available

* Please see Service Bulletin #182 entitled Assembly Change to Steering Column